Internal Drain Connector

MRS

+ For different nominal sizes
+ Internal seal
+ Resistant to 0.5 bar
+ Easy & Quick installation

Internal Drain Connector – for the internal connection of pipes with different dimensions.
The internal drain connector is suitable for flush mounting as well as for exposed pipe connections. The MRS is made of a high-quality EPDM sealing material, which is characterized by durability and has a noise-reducing effect in downpipes.

CE 22 DIN EN 681

LRQA CERTIFIED ISO 9001

INSTALLATION

Position pipe ends.

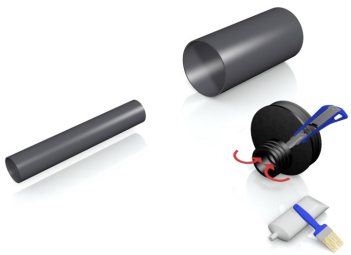

Fold in or cut off internal drain connector at the desired position, depending on the connection situation.

Insert internal drain connector into larger pipe, apply lubricant and push in smaller pipe.

PLUMBING

DESCRIPTION

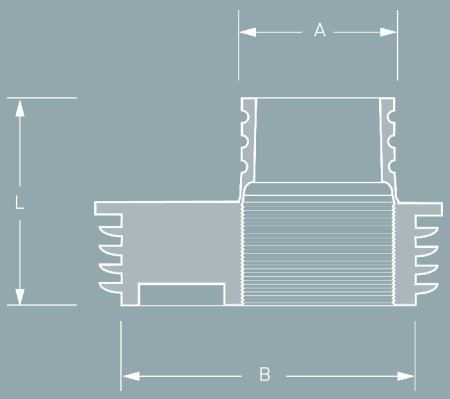

TECHNICAL SPECIFICATION

Internal Drain Connector – for the internal connection of pipes with different dimensions.

Pipe 1	DN/Material	_____
Pipe 2	DN/Material	_____
Article Number	_____	
	____ Qty ____ Price/Unit ____ Total	
Manufacturer:	MÜCHER DICHTUNGEN®, D-50226 Frechen, T +49 2234 928 03-0, F -55	
Pressure Tightness:	0.5 bar water / -0.3 vacuum	
Sealing Material:	EPDM rubber according to DIN EN 681-1	
Temperature Resistance:	-40°C to +120°C, temporary max. temperature +160°C	
UV-/Ozone Resistance:	Resistant to UV radiation and ozone	
Standard/Approval:	DIN EN 681-1	

PRODUCT RANGE

INTERNAL DRAIN CONNECTOR MRS						
Article Number	Reference	A Size Range (mm)	B Size Range (mm)	L Length (mm)	resistant to (bar)	Weight (kg)
500130	Internal Drain Connector MRS	40/50	103	67	0,5	0,15
500131	Internal Drain Connector MRS	75/90	103	67	0,5	0,10